# HY-WM7W

SPEAKER WALL MOUNTING BRACKET

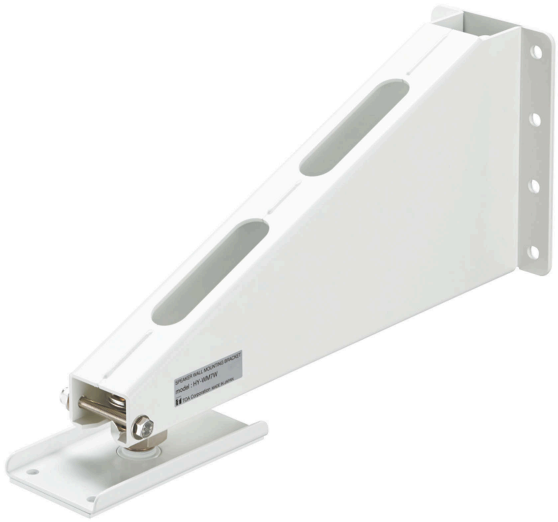

The HY-WM7W Speaker Wall Mounting Bracket is intended for mounting the HX-7W Speaker System to the wall by using in combination with the optional HY-VM7W Speaker Rigging Bracket.

## Key features

## Specifications

| | |
|---|---|
| Finish | Steel plate, white, semi-gloss, paint |
| Weight | 5 kg (11.02 lb) |
| Included Accessories | Speaker mounting bolt …4 |
| Optional Accessories | Speaker rigging bracket: HY-VM7W |
| Product Composition | Bracket A …1, Bracket B …1 |

## Dimensions

Bracket A

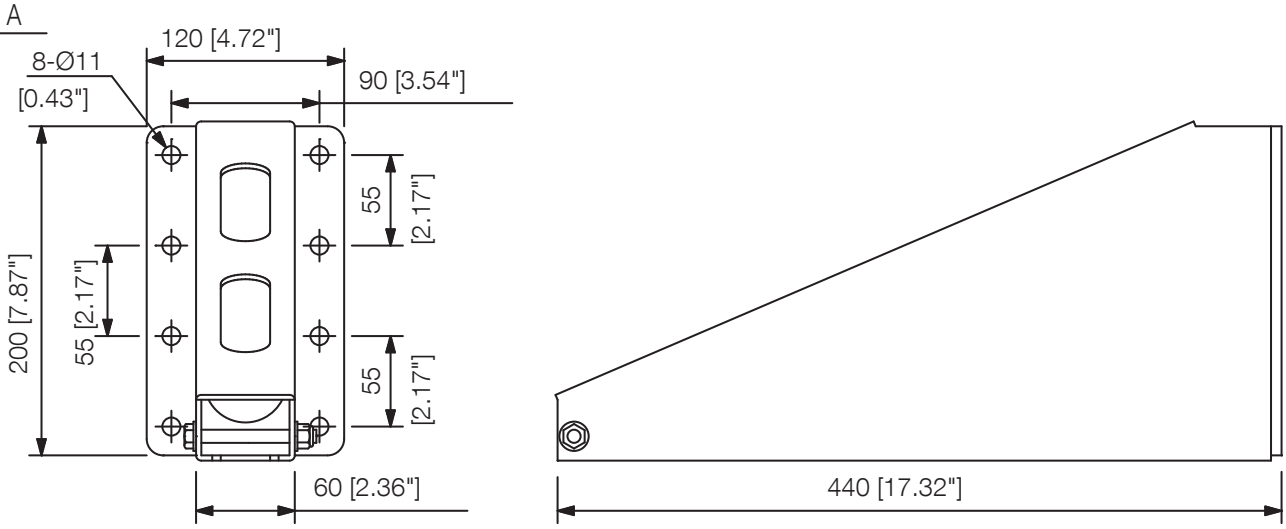

# Dimensions

Bracket B

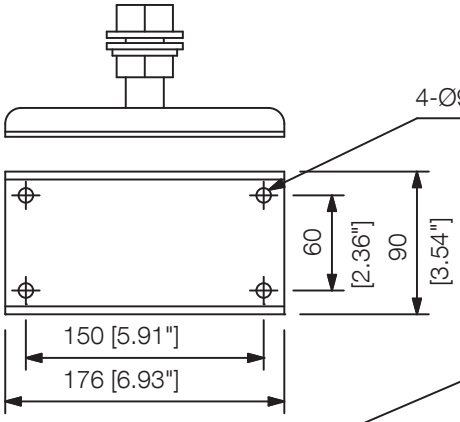


Speaker mounting example (scale: 1/15)

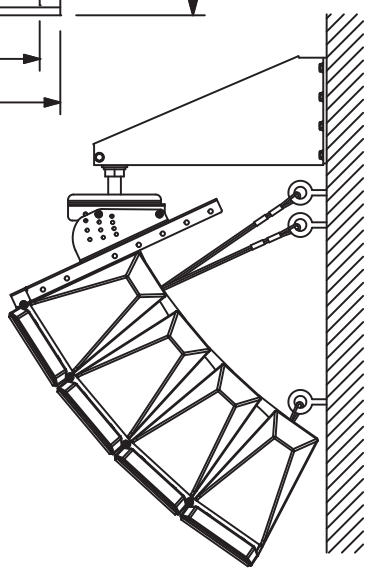

Speaker: 30° mode
Bracket: When set to a tilt angle of 25°

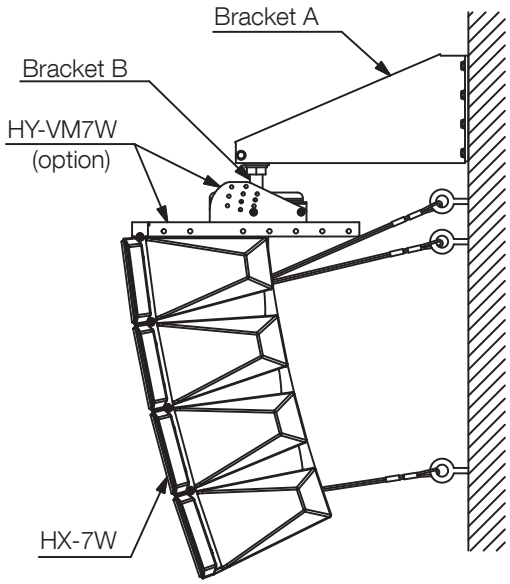


Speaker: 15° mode
Bracket: When set to a tilt angle of 0°

Note: Wires, anchor shackles, and carabiners necessary for hanging are not supplied with the product.

UNIT:mm SCALE:1/5

# A&E specifications

*UNDEFINED TEXT*